Characteristics, Accuracy and Reverification of Robotised Articulated Arm CMMs

Mr. R.J. Sanders [1,2], Dr. J.A. Thornby[1,3], Dr. A. Attridge[1], Mr. R. Hyde-Moxon[2], Prof. R.S. MacKay[3], Mr. C. Stott[2], Dr. M.A.Williams[1], Prof. K.W.Young[1]

[1] WMG
International Manufacturing Centre
University of Warwick
CV4 7AL
United Kingdom

[2] Nikon Metrology
Argosy Road
East Midlands Airport
Derby
DE74 2SA
United Kingdom

[3] Mathematics Institute
Zeeman Building
University of Warwick
CV4 7AL
United Kingdom

Corresponding Authors

Redland Sanders: r.j.sanders@warwick.ac.uk +44(0)7886 366554
John Thornby: john.thornby@warwick.ac.uk +44(0)24 7615 0262

Word Count

5662

Number of Images

5

Characteristics, Accuracy and Reverification of Robotised Articulated Arm CMMs

Mr. R.J. Sanders, Dr. J.A. Thornby, Dr. A. Attridge, Mr. R. Hyde-Moxon,
Prof. R.S. MacKay, Mr. C. Stott, Dr. M.A.Williams, Prof. K.W.Young

Abstract

VDI article 2617 [1] specifies characteristics to describe the accuracy of articulated arm coordinate measuring machines (AACMMs) and outlines procedures for checking them. However the VDI prescription was written with a former generation of machines in mind: manual arms exploiting traditional touch probe technologies. Recent advances in metrology have given rise to noncontact laser scanning tools and robotic automation of articulated arms – technologies which are not adequately characterised using the VDI specification.

In this paper we examine the "guidelines" presented in VDI 2617, finding many of them to be ambiguous and open to interpretation, with some tests appearing even to be optional. The engineer is left significant flexibility in the execution of the test procedures and the manufacturer is free to specify many of the test parameters. Such flexibility renders the VDI tests of limited value and the results can be misleading. We illustrate, with examples using the Nikon RCA, how a liberal interpretation of the VDI guidelines can significantly improve accuracy characterisation and suggest ways in which to mitigate this problem.

We propose a series of stringent tests and revised definitions, in the same vein as VDI 2617 and similar US standards, to clarify the accuracy characterisation process. The revised methodology includes modified acceptance and reverification tests which aim to accommodate emerging technologies, laser scanning devices in particular, while maintaining the spirit of the existing and established standards. We seek to supply robust re-definitions for the accepted terms "zero point" and "useful arm length", pre-supposing nothing about the geometry of the measuring device.

We also identify a source of error unique to robotised AACMMs employing laser scanners – the forward-reverse pass error. We show how eliminating this error significantly improves the repeatability of a device and propose a novel approach to the testing of probing error based on statistical uncertainty.

1. Introduction

Scope of Standards

AACMMs are manually operated devices requiring physical support from a human when in use, in contrast with traditional Cartesian coordinate measuring machines (CMMs) which are fully motorised and can be operated under computer numerical control (CNC). The accuracy of an AACMM is, therefore, inextricably linked to the skill of the operator. Furthermore the sources of error encountered by a CMM differ significantly from those of an AACMM, which utilises only rotational joints to obtain six degrees of freedom (DOF) for its end-effector probe. An AACMM suffers errors from, among other things: angular deviations; the zero-point position of rotary encoders; the lengths of arm segments; angular positions and spacing between rotary axles; joint play and hysteresis. Due to these differences in operation and construction the two systems must be treated differently and a series of standard tests have evolved to describe the accuracy characteristics of each.

VDI 2617 specifies the procedures necessary to characterise the performance of AACMMs and provides clarification on acceptance and reverification tests. The standards apply to systems with up to seven non-motorised rotational joints and employing a contact probe end-effector. Optical noncontact probes are specifically excluded.

Terms and Definitions

In order to understand the tests presented in VDI 2617 and our subsequent analysis it is necessary to define the *measuring range* (alternatively *measuring volume*), *useful arm length* (UAL) and *zero point* (Zp). Measuring range – specified by the manufacturer – is defined as "the diameter of the spherical volume within which the AACMM is capable of measuring coordinates" [1]; with the useful arm being half this value. It is intended that the manufacturer should choose a measuring range (and hence useful arm length) which is less than the true range of the device, since performance will be compromised at the boundaries and articulation of the wrist joint will be limited with the arm at full extension, shown in Figure 1.

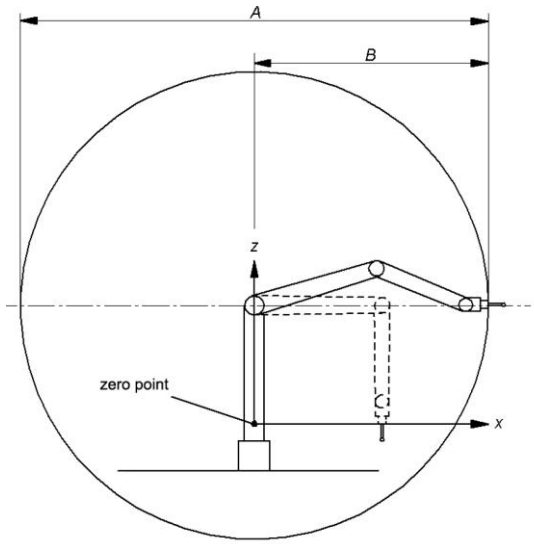

Figure 1: Measuring range A, useful arm length B and zero point of an AACMM (from [1]).

The zero point "lies on the vertical main axis connecting the articulated arm with the stationary environment, where this axis intersects with the zero level" [1]. The zero level, again specified by the manufacturer, is usually defined by the probe height with the arm in a specific pose, as in Figure 1.

VDI Reverification Tests

VDI 2617 outlines two distinct reverification tests for AACMMs. The first measures the repeatability of a device, performed by testing the probing errors of indication for shape, form and location. This is achieved by measuring the position of a calibrated metrology sphere in various locations throughout the measuring volume. The sphere positions should lie within three 120° sectors, at a centre distance d from the zero point, where: d < 30% UAL, 30% UAL ≤ d ≤ 70% UAL and d > 70% UAL, shown in Figure 2. The sphere heights, h, (relative to the zero level) are specified as -20% UAL, +0% UAL and 50% UAL.

Each sphere is probed five times (typically four points on the equator and a single point at a pole) with a fixed probe orientation, resulting in five points defining the sphere. Standard metrology fitting algorithms are employed to fit a sphere to the data, yielding a sphere centre coordinate. The procedure is performed five times on each sphere, using a different probe orientation each time. VDI 2617 describes the probing error of location (*PL*) as the greatest difference between any two of the five sphere centre coordinates for a given sphere position. This shall, henceforth, be referred to as the "sphere test".

The second test measures accuracy by ascertaining the error of a length measurement within the volume. A material length standard (typically a calibrated ball-bar) is located in seven dissimilar positions and orientations spanning the volume, shown in Figure 2. The AACMM is used to measure the lengths between each of 6 calibrated points (i.e. five length measurements) in each of the seven locations. The process is repeated twice, yielding 105 length measurements: 5 (measurements per location) × 3 (repeats)

× 7 (locations). The error of indication of size measurement (E) is the difference between the measured length and the calibrated length of the material standard artefact. This shall, henceforth, be referred to as the “ball-bar test”.

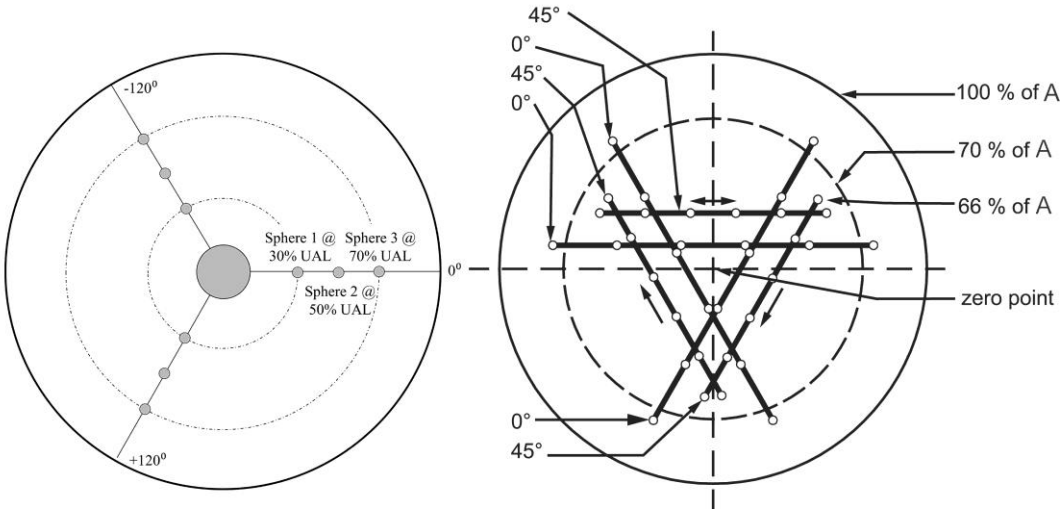

Figure 2: Plan views of an AACMM workspace.
Left – A calibrated metrology sphere is placed in each of three 120° sectors. One sphere is placed in each of the distance ranges < 30%, 30% – 70% and > 70% of the UAL and at heights (not illustrated) of -20%, +0% and +50% of the UAL relative to the zero level. The choice of which sector/distance/height combination to use is “arbitrary” [1]. Since access is restricted the immediate vicinity of the AACMM is usually excluded.
Right – VDI-prescribed locations for a calibrated ball-bar within the measuring volume (from [1]).

The purpose of reverification is to check how well the calibration process has identified and fully characterised all the types of error intrinsic to system, allowing them to be corrected and compensated for during operation – achieved using the probing error in VDI 2617. In theory a perfectly characterised system produces a systematic error, normally distributed in all directions, and limited only by the resolution of the system in measuring those contributing parameters. However in practice there is a limit to the amount of error that can be fully characterised because not all variables can be monitored and not all parameters can be identified in the compensation model, thus there is always a residual systematic error consisting of uncompensated error which is greater than the combined system resolution. The uncharacterised systematic error should consist of the least significant error types and thus be as small as possible.

Robotised AACMMs

It is only natural that one may wish to combine the repeatability and automation capability of a traditional CMM with the dexterity and articulation of an AACMM. This is achieved by motorising the rotational joints of a manual measurement arm, resulting in a robotic AACMM (RAACMM). Furthermore noncontact laser scanning devices are a burgeoning technology and it would seem advantageous to combine one with an RAACMM in order to build a device capable of rapid, accurate data collection over a large area – thereby improving efficiency and throughput.

However, since both VDI 2617 and its American counterpart, ASME B.89 [2], specifically exclude motorised joints and optical noncontact probes, such a device is left without an applicable standard governing its error characterisation and reverification procedure. It is the aim of this paper to analyse the VDI standard and propose ways in which it might be adapted for RAACMMs – including the use of laser scanning technologies. Due to the autonomous nature of an RAACMM one might also be able to exploit methods similar to those specified in ISO 10360 [3] for Cartesian CMMs.

Comparison of contact probes and optical noncontact devices is difficult but the author of [4] highlights the issues associated with comparing accuracy of laser line scanners to touch-trigger probes. There are presently a limited number of resources documenting performance evaluation tests for laser scanners – for both CMMs and articulated arms. VDI/VDE 2634 [5] defines several general tests for 3D noncontact scanners and the Optical Sensor Interface Standard (OSIS) project [6] also defines general metrological performance tests for optical sensors, although there are still no internationally recognised standards specifically addressing laser triangulation sensors such as the laser line scanner on the Nikon RCA which is used for the tests performed in Section 3.

Nikon (Metris) RCA

The RCA, shown in Figure 3, consists of a highly accurate 7-axis articulated measurement arm housed within a robotized exoskeleton driven by electromotors. A unique mounting system serves as the interface between the Internal Coordinate-measuring Arm (ICA) and the supporting exoskeleton This early stage prototype utilises development versions of the controlling software and qualification routines. Whilst the data we present is valid for the tests conducted, they do not fully represent the commercial version of the RCA that Nikon will offer to the market.

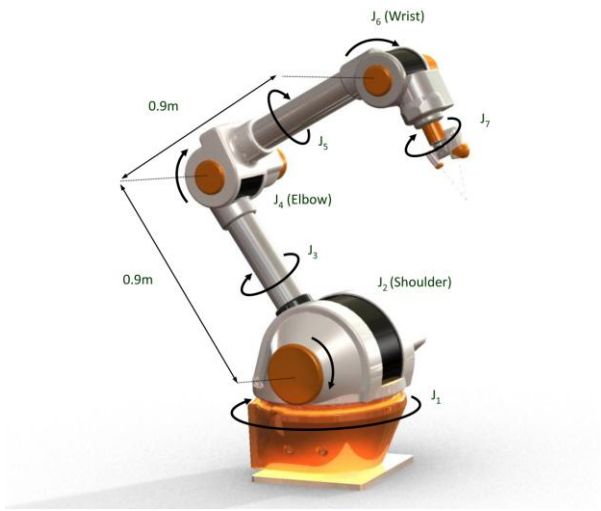

Figure 3: Prototype RCA – a 7-axis RAACMM equipped with a Nikon (Metris) MMD laser scanner. Joints (J_n) are numbered sequentially from base to end-effector and directions of their rotations are indicated. It stands 2580mm tall when fully erect and sweeps out a hemisphere of radius 2440mm.

2. Interpreting VDI 2617 for RAACMMs

In order to assess the suitability of VDI 2617 as a standard for RAACMMs it is necessary to make some assumptions and approximations. Given the dimensions of the RCA the UAL is defined to be 80% of the length of the middle two arm links ("shoulder" to "wrist") = 1400mm. The zero level is taken to be the height of the mounting face of the wrist joint when the arm is in the dashed configuration pictured in Figure 1, i.e. J4 = J6 = 90°, resulting in Zp = 940mm from the ground.

Wherever a test demands five (or more) measurements of an artefact in order to extract information a single pass of the laser scanner is instead performed, yielding a point cloud from which the geometry and location of the artefact can be extracted. The tests are performed in a manner faithful to the prescription given in VDI 2617, including the use of multiple probe orientations, although additional data is collected in the sphere tests for four reasons:

1. Each sphere height is tested at each radial distance and in each sector, to allow comparison between the sphere sites. Yielding a total of 27 spheres, as opposed to the prescribed three.
2. In order to permit comparison with the equivalent ASME standard [2] each measurement is performed ten times – utilising the automation capability of an RAACMM.

3. Of the ten repetitions for each measurement, five are performed in a forward direction and five in a backward direction – i.e. the laser stripe trajectory is reversed to test for systematic effects.
4. Additional measurements are also performed within each sector, at each height and at a radial distance = UAL, yielding an additional nine sphere sites (a total of 36). This is to investigate how the performance degrades at larger radial distances and so that the procedure would also be valid had a UAL of 2000mm been chosen initially.

To allow a fair comparison of data from different sphere sites the radial distances are consistently chosen to be 30%, 50% and 70% of the UAL, as well as at 100% of the UAL as discussed above.

The ball-bar test is performed according to the VDI specification, with a single pass of the laser scanner replacing multiple contact points of a touch probe. The results of this test, however, are not the subject of this paper.

3. Results of an RAACMM sphere test

The results from the 36 sphere tests are shown in Table 1. The data is separated by sphere height into three distinct groups. Within each group the data is further subdivided by sector and radial distance. The first point of note is that scanning was impossible at the closest radial distance and greatest sphere height, thereby reducing the dataset from 36 to 33 sphere sites. This is due to the lack of articulation in the RAACMM when the joints are near to their maximum limits.

The first row shows *PL*, as defined by VDI, for each sphere site. Rows two and three show δ_{max} and $2s_{SPAT}$ for each sphere site, which are error measures derived from a Single Point Articulation Test (SPAT) as defined by the ASME standard [2]. The SPAT test essentially uses the same procedure as the VDI sphere test but requires multiple measurements at each sphere site. One defines a deviation, δ_i, as the distance of a given point from the mean of the sample (barycentre). δ_{max} is then the greatest deviation in the sample and $2s_{SPAT}$ is two standard deviations of the dataset.

One can say little about the data on its own, save that it is clear that the RAACMM performs rather better at some sphere sites than at others. The data must be interpreted in light of the VDI specifications in order to be of value – an analysis that is reserved for Section 4.

The final performance measure quoted in Table 1 for each scan site is the error observed between forward and reverse passes of the laser scanner, demonstrated in Figure 4. We define 'forwards' as the sensor preceding the laser stripe, and vice versa for 'reverse'. A consistent offset of approximately 50µm is observed in data collected at each sphere site at the low and medium heights, climbing to a mean of over 100 µm at the greatest height sphere sites. The forward-reverse pass error (E_{FRP}) is defined as the distance between the barycentre of the forward pass dataset and that of the reverse pass dataset.

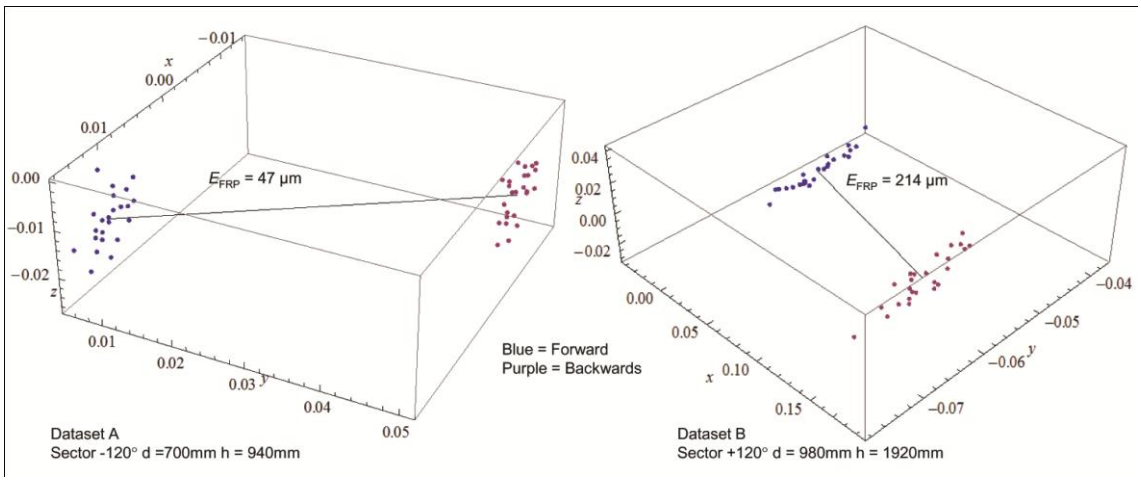

Figure 4: Scatter plots of measured sphere centre coordinates (µm) demonstrate directional spread and a consistent separation between data gathered in forward and reverse passes of the laser scanner.

Lowest Height, 940mm (Zp – 20% UAL)

Sphere Site / Measure of Performance	30% = 420mm			50% = 700mm			70% = 980mm			100% = 1400mm			Mean
	-120°	0°	+120°	-120°	0°	+120°	-120°	0°	+120°	-120°	0°	+120°	
VDI *PL* (µm)	57	65	57	53	60	60	54	53	117	61	67	84	66
ASME δ_{max} (µm)	34	37	29	28	32	33	30	30	102	31	35	53	40
ASME $2s_{SPAT}$ (µm)	49	49	51	49	49	51	46	45	56	49	54	57	50
E_{FRP} (µm)	39	45	49	47	47	49	44	43	46	47	52	45	46

Middle Height, 1220mm (Zp + 0% UAL)

Sphere Site / Measure of Performance	30% = 420mm			50% = 700mm			70% = 980mm			100% = 1400mm			Mean
	-120°	0°	+120°	-120°	0°	+120°	-120°	0°	+120°	-120°	0°	+120°	
VDI *PL* (µm)	106	63	69	65	64	65	106	54	120	63	60	80	76
ASME δ_{max} (µm)	63	34	37	34	37	35	92	35	96	31	30	41	47
ASME $2s_{SPAT}$ (µm)	67	52	54	56	56	56	50	45	52	62	39	51	53
E_{FRP} (µm)	51	49	52	53	53	54	39	42	38	50	35	60	48

Greatest Height, 1920mm (Zp + 50% UAL)

Sphere Site / Measure of Performance	30% = 420mm			50% = 700mm			70% = 980mm			100% = 1400mm			Mean
	-120°	0°	+120°	-120°	0°	+120°	-120°	0°	+120°	-120°	0°	+120°	
VDI *PL* (µm)				139	111	262	85	298	241	121	209	213	187
ASME δ_{max} (µm)				73	65	174	49	236	128	62	139	111	115
ASME $2s_{SPAT}$ (µm)				106	73	156	58	135	217	90	106	193	126
E_{FRP} (µm)				104	51	144	52	51	214	81	73	190	107

Table 1: RAACMM performance measures. Data is grouped initially by sphere height, and then further divided by radial distance and sector. PL (VDI), δ_{max} and $2s_{SPAT}$ (ASME) are shown for each of 33 sphere sites to the nearest micron. E_{FRP} is a measure of the forward-reverse pass error. Green cells show the optimal choice of sphere sites for the VDI test, while red highlights the worst; mauve cells contain datasets A and B from Figure 4 and blue contains an anomalous point for discussion.

4. Discussion

In performing a VDI sphere test several observations are made which highlight flaws and inconsistencies in the prescribed method, many of which are as applicable to its intended use with manual articulated arms as they are to RAACMMs.

Firstly it can be seen from the data that the position of the calibrated sphere within the measurement volume can make a significant difference to the location probing error, yielding a range of *PL* values between 53µm and 298µm. As such the choice of sphere location becomes extremely important and is not nearly as "arbitrary" as the VDI prescription would suggest. If one performs the VDI sphere test using the sphere sites highlighted in green in Table 1, one obtains a *PL* of 85µm (the worst of the three chosen sites). However on another occasion the spheres may be arranged differently, perhaps yielding a *PL* as bad as 298µm – highlighted in red in Table 1 as the site of greatest location error. The unscrupulous manufacturer could, therefore, perform a similar analysis and establish the most favourable locations to use for VDI sphere tests.

Similarly the zero point is specified by the manufacturer but has no bearing on anything other than defining the heights of the calibrated spheres. As such Zp could be adjusted and tuned to optimise the measurement device's position within the workspace for the VDI sphere test. Likewise the VDI standard does not precisely specify the angular positions to be used, save only that they should lie in different 120° sectors. If the manufacturer is aware that positional accuracy is poorer in part of the workspace – perhaps an area where the system is not well calibrated – then the triad of spheres could simply be rotated in order to avoid the unfavourable region. There is significant flexibility too in choosing the radial distances of the spheres and in principle one is free to choose two similar values of d which happen to fall in different zones. For example choosing d_1 = 29% and d_2 = 30% of the UAL may serve a purpose to take advantage of a sweet spot in the measurement volume.

Furthermore VDI 2617 [1] states the positions of the spheres "shall, if possible, lie in the following ranges..." and specifies their heights "approximately". It is not entirely clear what should happen if those sphere positions are not possible – does one place them as close as possible, or is the test null and void? It is conceivable that this situation could arise if an articulated arm was created that could not completely cover a spherical workspace. VDI 2617 concedes that "the angular ranges of the rotary encoders can be unlimited (360°) or limited", which therefore permits the possibility of an RAACMM with limited articulation that is unable to reach behind itself – rendering one (or even two) of the 120° sectors inaccessible. This scenario creates further ambiguity because the definition of measuring range is "the diameter of the spherical volume within which an AACMM is capable of measuring coordinates" – if there is no spherical volume then the device can have no measuring range.

Forward-Reverse Pass Error

Probing error is exaggerated by the presence of E_{FRP}. The largest *PL* in nearly every case occurs between a pair of forward and reverse pass sphere centres. If the data is filtered into subsets containing forward and reverse pass information only and analysed separately it is tantamount to eliminating E_{FRP}. Using datasets A and B from Figure 4 as examples it is clear that all measures of probing error are significantly reduced for the filtered data, as shown in Table 2.

	PL_0	PL_{FWD}	PL_{REV}	$\delta_{max\ 0}$	$\delta_{max\ FWD}$	$\delta_{max\ REV}$
Dataset A	53 µm	19 µm	17 µm	28 µm	10 µm	10 µm
Dataset B	241 µm	32 µm	26 µm	128 µm	23 µm	14 µm

Table 2: PL (VDI) and δ_{max} (ASME) are shown to the nearest micron for datasets A and B, before and after separation into forward and reverse pass datasets.

It appears, therefore, that E_{FRP} is the single most significant contributing factor to both the VDI and ASME measures of probing error. Tables 3 and 4 show recalculated values for *PL* and δ_{max} for all 33

forward datasets (similar figures are obtained for the reverse datasets). The overall effect of splitting the data is to reduce position error indicators *PL* and δ_{max} by a mean factor between two and three. This significantly improves the repeatability of the device to 51µm mean *PL* and 30µm mean δ_{max}, although these values are heavily biased by anomalous data and it can be seen that repeatability is sub-20 µm in a significant fraction of the measuring volume.

Sphere Position	30% = 420mm			50% = 700mm			70% = 980mm			100% = 1400mm			Mean
	-120°	0°	+120°	-120°	0°	+120°	-120°	0°	+120°	-120°	0°	+120°	
Low, 940mm	57	36	15	19	17	23	18	21	24	16	20	61	27
Med, 1220mm	71	26	21	25	28	18	106	24	107	22	27	15	41
High, 1920mm				36	72	123	52	298	32	54	105	25	86

Table 3: PL (µm) for each sphere site (forward dataset only). Datasets A and B are highlighted in mauve, a set containing a statistically anomalous point in blue and the worst set in red.

Sphere Position	30% = 420mm			50% = 700mm			70% = 980mm			100% = 1400mm			Mean
	-120°	0°	+120°	-120°	0°	+120°	-120°	0°	+120°	-120°	0°	+120°	
Low, 940mm	51	23	9	10	12	15	11	17	17	9	10	43	19
Med, 1220mm	43	16	12	16	17	12	42	15	43	15	16	10	21
High, 1920mm				24	46	61	24	145	17	39	66	16	49

Table 4: δ_{max} (µm) for each sphere site (forward dataset only). Datasets A and B are highlighted in mauve, a set containing a statistically anomalous point in blue and the worst set in red.

It is possible that E_{FRP} could be the result of backlash caused by stresses transferred from the exoskeleton to the ICA during a short forward move followed by a reverse move. This error however, is thought to be small and unlikely to give rise to the errors of the magnitude seen in testing. In article [7] the author suggests that the transformation matrix used to transform coordinates in the scanner coordinate system to the global arm coordinate system is highly dependent on the digitisation trajectories used in its generation, thus it is only suitable for digitising trajectories similar to those used in the qualification procedure. This would explain why a device qualified in only one direction would experience inconsistencies if operated in reverse.

The scanner qualification comprises four scans in three orthogonal positions. The four scans are in the four quadrants of the scanner width and depth of field, two of which are in a forward direction, and the other 2 two in reverse. There is also a velocity compensation scan which travels through the field of view at what should be the maximum scanning velocity. That said, the MMD scanner is designed for use as a handheld scanner and the qualification procedures are different (the handheld procedure qualifies on a block plane). The assumption, even given the justification for this not being the error, is that it is likely to be the scanner qualification that is responsible for most of the forward-reverse pass error and thus should be possible to eliminate with an appropriate qualification procedure.

Another interesting effect that can be seen clearly in the data is that of outlying points. Neither VDI nor ASME are specific about whether anomalous data should be discarded or accepted as an inherent part of the measurement process. In measuring *PL* according to the VDI specification a single poor measurement can cripple the test result, whereas the effect is somewhat mitigated in measuring δ_{max} because an outlying point will pull the barycentre towards itself; suggesting that the ASME method is more robust. The red and blue datasets from Tables 1, 3 and 4 both contain an anomaly and it can be seen that *PL* is unchanged even after filtering. This is because the greatest distance occurs between two points both from the forward dataset. However δ_{max} is approximately halved in both cases because the anomalous point is significantly closer to the forward barycentre than the barycentre of the unfiltered dataset. However if one examines the reverse data for the same sphere sites one observes a marked improvement in both *PL* and δ_{max}, For

the red data *PL* improves from 298µm to 162µm and δ_{max} from 236µm to 109µm, while for the blue data *PL* improves from 106µm to 15µm and δ_{max} from 92µm to 14µm. So the effect of filtering is to purify half the data when an anomalous result would otherwise bias the result of a VDI sphere test.

5. Conclusions and Recommendations

A manual AACMM requires the time of an operating engineer, so it is understandable that standards pertaining to such devices should prescribe brief procedures. An automated RAACMM, however, is capable of executing a complex reverification programme with multiple repetitions. The limited quantity of measurements demanded by VDI 2617 and its definition of *PL* render its results susceptible to anomalous data and as such we favour the more robust ASME SPAT test and its definition of δ_{max}.

We propose that data should not be treated just using the maximum probing error on a limited number of samples around the workspace. Instead the Central Limit Theorem (CLT) should be employed to monitor the distribution of the sample means with confidence intervals. CLT states that if a random sample of *n* observations, $y_1, y_2, ..., y_n$ is drawn from a population with a finite mean μ and variance σ^2, then, when *n* is sufficiently large, the distribution of the sample means, $\tilde{y}$, can be approximated by a normal distribution, even if the population itself has an obscure distribution. By monitoring the mean value of *PL* for each full sphere test and plotting those as a probability density function (PDF) they will follow a normal distribution, irrespective of the actual spread of data at each sphere site. A minimum of 15 site tests are required to obtain enough sample mean information to plot the PDF accurately. Measuring spheres at multiple sites facilitates observation of a shift in the mean, indicative of a variation in the system repeatability between consecutive reverification tests, demonstrated in Figure 5. This method offers significant benefits to the manufacturer and customer and provides a robust measure of changes in repeatability. It can be applied equally well to the ASME measure of δ_{max}.

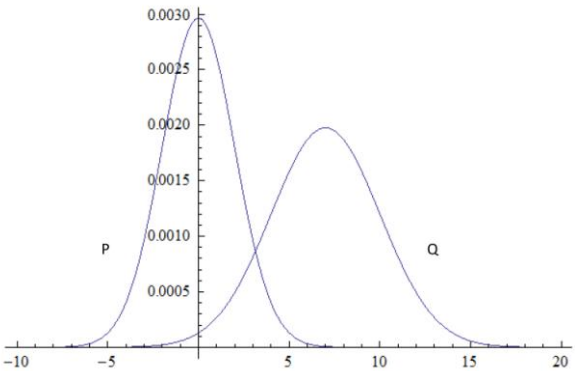

Figure 5: Graph showing the normal distribution of the means for the population of reverification sphere sites P and Q. The shift in the means of the distributions suggests that there has been a change in the system. This can be tested using standard statistical confidence interval tests.

Secondly we seek to remove ambiguity from the VDI prescription by replacing "guidelines" [1] with strict prescriptive rules. Primarily we seek to abandon the zero point, Zp. In its current guise it holds little meaning but can significantly affect the results obtained from a VDI reverification test. Zp "lies on the vertical main axis connecting the articulated arm with the stationary environment, where this axis intersects with the zero level" [1], but in fact there is no requirement that the main axis connecting the arm to its fixture should be vertical – in fact there are legitimate design reasons why one might not want this to be the case. If the main axis is not vertical then the zero level is not horizontal which creates ambiguity in placing the measuring sphere – does one measure heights relative to the stationary environment (i.e. Zp) or relative to the orientation of the measurement device (i.e. the zero level)?

Since the workspace is intended to be spherical it seems reasonable to treat the workspace z-axis (which need not be vertical) in the same manner as the x- and y-axes, and so it is logical to define all distances and heights in terms of a single parameter – which we recommend to be the useful arm length, UAL. The

workspace is then defined simply by a radius (the UAL) and a centre point (the intersection of rotational axes 1 and 2 at the "shoulder"). The workspace z-direction is taken to be along axis 1, and a perpendicular "central plane" intersecting axis 2 fixes the local x- and y-directions. All heights are then measured in the z-direction relative to the central plane and all distances are measured in the x-y plane radially from the z-axis. Angles should then be specified relative to the *workspace* and not the stationary environment. The manufacturer, therefore, need only specify the UAL and a direction deemed to be "forwards".

For an RAACMM sphere test, under the assumptions made in Section 2, we recommend prescribing four fixed distances (D_1-D_4) and heights (H_1-H_4), both in terms of the UAL. Each combination, D_nH_m, is to be used in the test *twice*, with the exception of the tallest height (H_4) at the closest and furthest distances (D_1, D_4) which are omitted since they may be inaccessible. 14 combinations result in 28 total sphere test sites – sufficient to employ the CLT analysis.

The workspace should be divided into quadrants, with 7 sphere tests to be carried out within each. The quadrants are specified by the manufacturer's decision of forward direction. The choice of sphere site used in each quadrant would be precisely defined according to the following two rules:

1. Each distance and height must be probed at least once per quadrant.
2. Each quadrant must have at least two sites, D_nH_m, in common with each other quadrant.

Acknowledging that, due to permitted joint limits, an RAACMM may not cover a complete sphere we propose additionally that whatever workspace a given RAACMM can cover (which may or may not be symmetrical) should be divided into equal quadrants such that the prescription above is still valid. In this manner all devices are treated equivalently and the same percentage of their workspaces is examined.

The analysis of forward-reverse pass error highlights the requirement to perform reverification bi-directionally for any dynamic scanning system. So the final recommendation is that each sphere site should be measured five times with bi-directional passes if a laser scanning system is employed.

Although this work does not specifically address the VDI ball-bar test, we would seek also to clarify and rigidly prescribe the position, orientation, and *attitude* of the length standards. Moreover we would prohibit the practise of overlapping a single shorter length standard in lieu of one of the required length. The reason for this is that it is conceivable that in some orientations the artefact may block the trajectory necessary to make a certain measurement, but using a shorter standard the path may be negotiable if the interposing section of the artefact is missing due to judicious choice of the overlap region.

6. Acknowledgements

The authors wish to thank the UK Technology Strategy Board (TSB) for funding the collaboration between Nikon Metrology and the University of Warwick on the RCA project.

7. References

1. VDI/VDE 2617 Part 9; Accuracy of coordinate measuring machines, characteristics and their reverification. Verein Deutscher Ingeniueure, 2009
2. ASME B89.4.22; Methods for performance evaluation of articulated arm coordinate measuring machines. American Society of Mechanical Engineers, 2005
3. ISO 10360-2; Geometrical Product Specifications (GPS) – Acceptance and reverification tests for coordinate measuring machines – Part 2: CMMs used for measuring size. ISO, 2002
4. Van Gestel, Nick et al; A performance evaluation test for laser line scanners on CMMs. *Optics and Lasers in Engineering* ***47***, 2009
5. VDI/VDE 2634 Part 2; Optical 3D measuring systems – optical systems based on area scanning. Verein Deutscher Ingeniueure, 2002
6. OSIS WG3; Specification, classifications and performance verification, *'Documentation' release 1.1*, 25 Jan 2006
7. Santolaria, Jorge; Modelling and calibration technique of laser triangulation sensors for integration in robot arms and articulated arm coordinate measuring machines. *Sensors 2009* ***9***, 11 September 2009